產品規格圖
(Standard of Products)

產品類別(Catologe):	搖擺開關(ROCKER SWITCH)
產品名稱(Name):	RF-1033
規格(Standard):	單極單切(SPST)
材質(Material):	NY
電流(Current Rating):	(1)10GPA
	(2)6GPA
電壓(Voltage Rating):	(1)125V AC T85
	(2)250V AC T85
產品認證(Approvals):	(1)UL/cUL
	(2)TUV

規　格　圖(Specification)

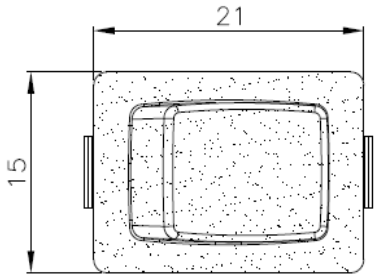

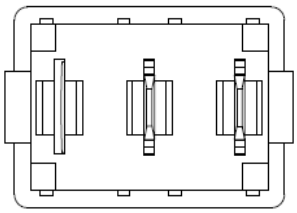

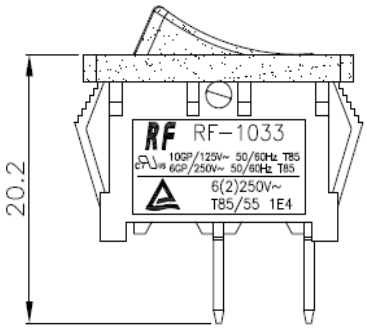

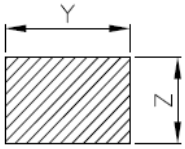

PANEL CUTOUT DIMENSION TABLE

X(PANEL THICKNESS)	Y(CUTOUT DIMENSION)	Z(CUTOUT DIMENSION)
0.75~1.25mm	$19.2\pm^{0.2}_{0}$ mm	$12.9\pm^{0.15}_{0}$ mm
1.25~2mm	$19.4\pm^{0.2}_{0}$ mm	$12.9\pm^{0.15}_{0}$ mm

Rong Feng®
榮 豐

TEL:886(49)2252421　FAX:886(49)2253647　MAIL:rongfeng@rongfeng.com.tw